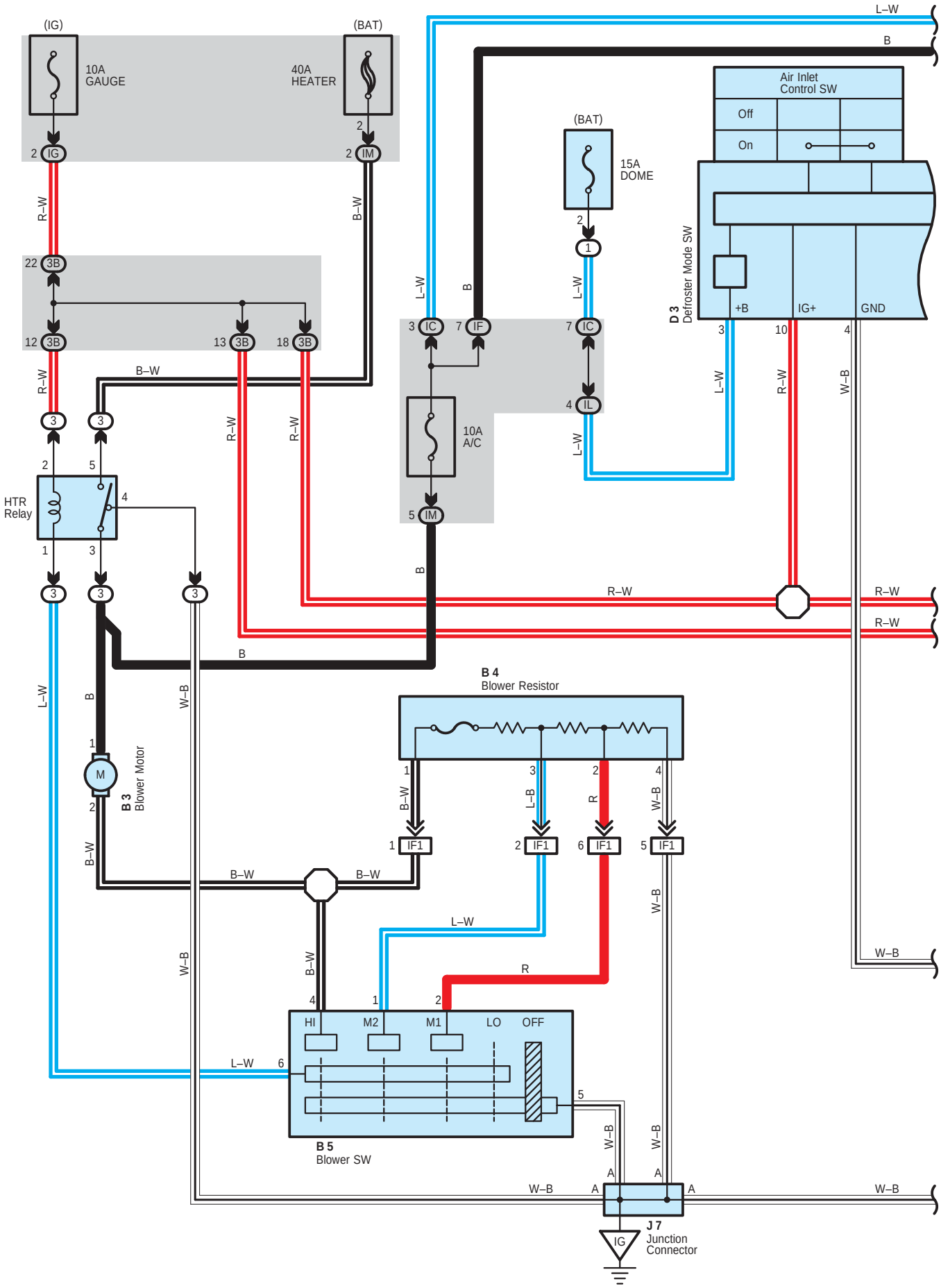
(IG)
10A
GAUGE
(BAT)
40A
HEATER
(BAT)
15A
DOME
Air Inlet
Control SW
Off
On
D 3
Defroster Mode SW
+B
IG+
GND
10A
A/C
HTR
Relay
B 3
Blower Motor
B 4
Blower Resistor
B 5
Blower SW
HI
M2
M1
LO
OFF
J 7
Junction
Connector
IG
L–W
B
R–W
B–W
W–B
L–B
R

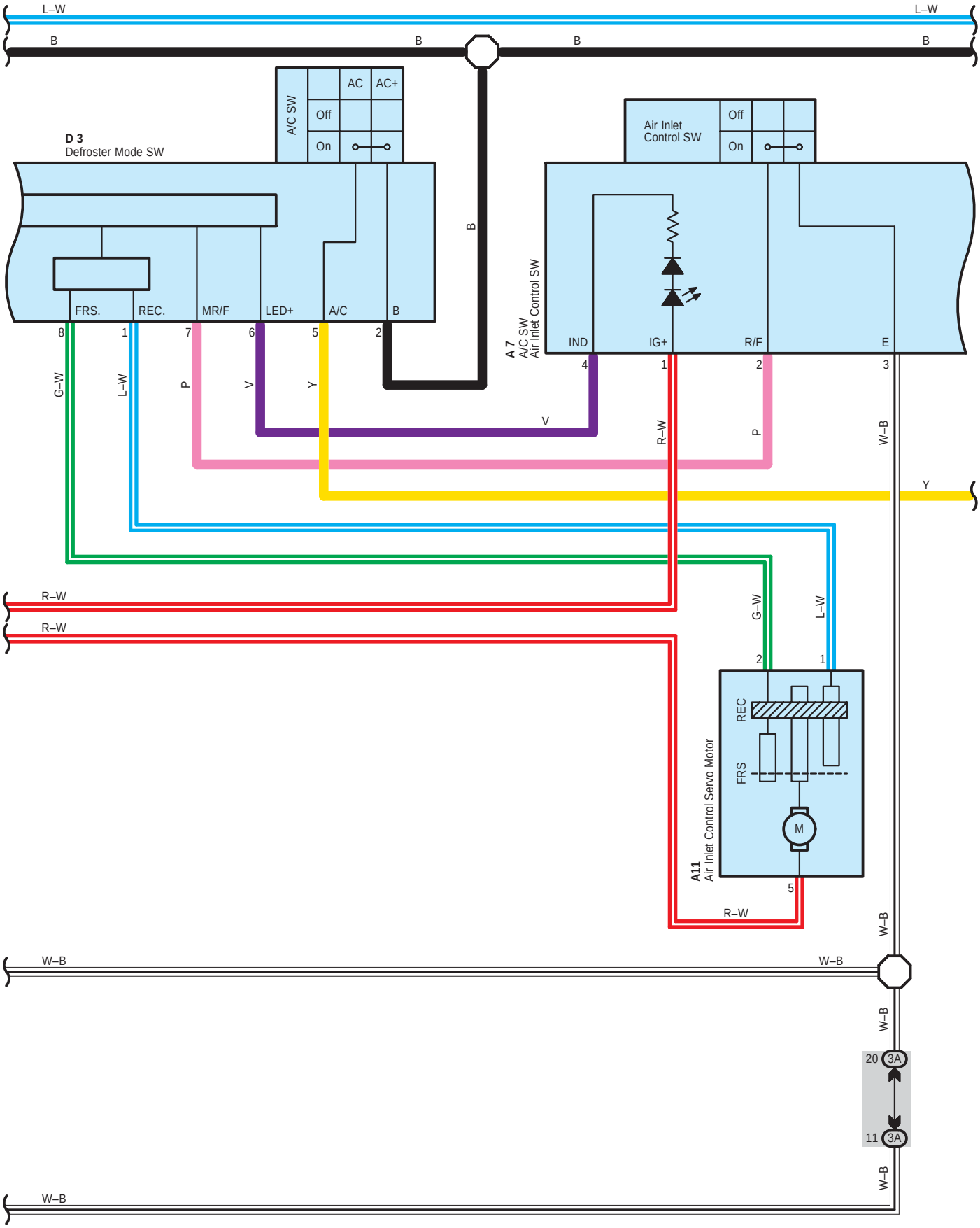
L–W
L–W
B
B
B
B
A/C SW
AC
AC+
Off
On
D 3
Defroster Mode SW
FRS.
REC.
MR/F
LED+
A/C
B
Air Inlet Control SW
Off
On
A 7
A/C SW
Air Inlet Control SW
IND
IG+
R/F
E
A11
Air Inlet Control Servo Motor
REC
FRS
M
G–W
L–W
P
V
Y
R–W
W–B
20
3A
11
3A

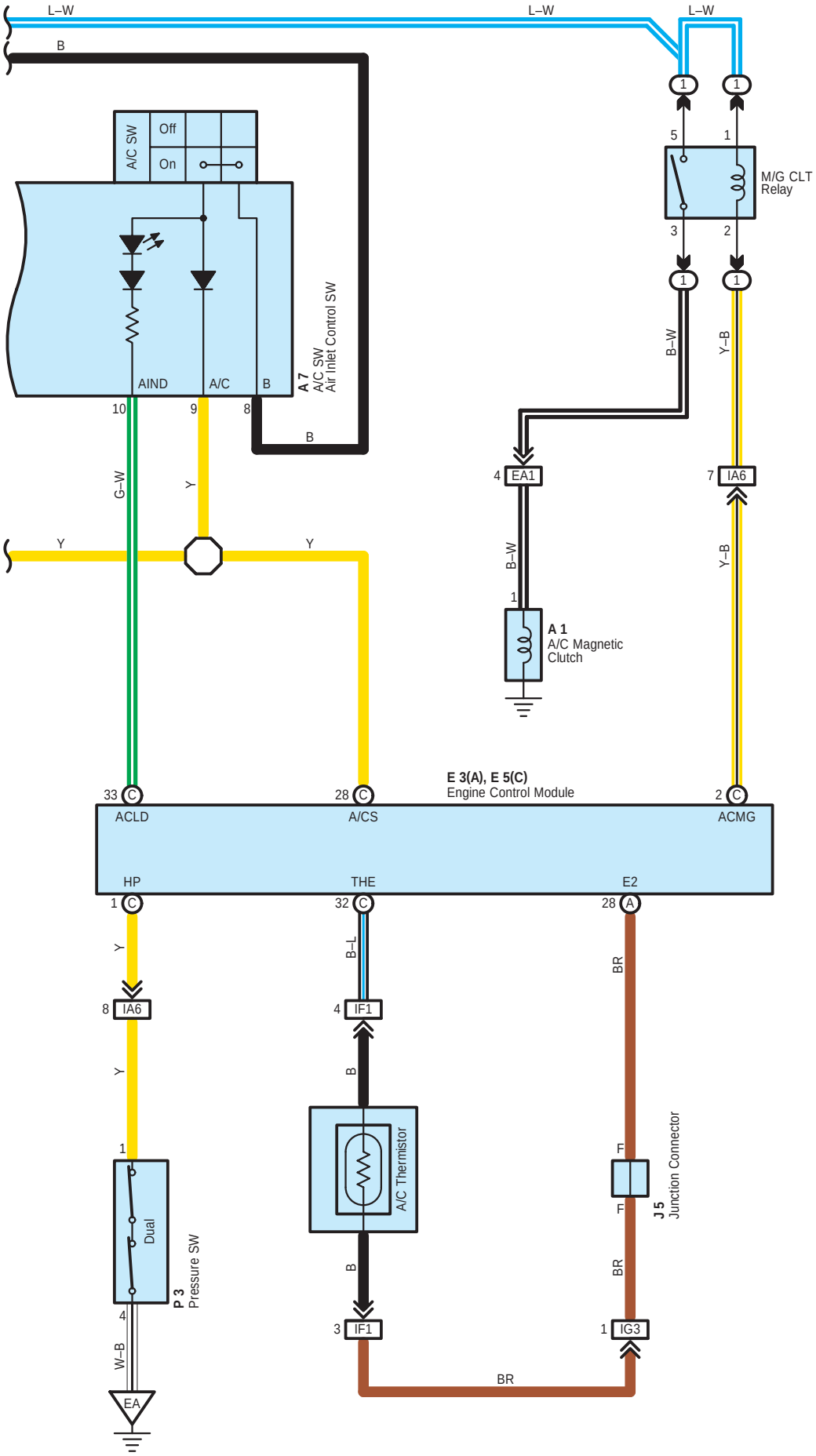
L–W
L–W
L–W
B
A/C SW
Off
On
AIND
A/C
B
A 7
A/C SW
Air Inlet Control SW
10
9
8
B
G–W
Y
Y
Y
1
5
1
M/G CLT
Relay
3
2
1
1
B–W
Y–B
4
EA1
7
IA6
B–W
Y–B
1
A 1
A/C Magnetic
Clutch
E 3(A), E 5(C)
Engine Control Module
33
C
ACLD
28
C
A/CS
2
C
ACMG
HP
THE
E2
1
C
32
C
28
A
Y
B–L
BR
8
IA6
4
IF1
Y
B
1
F
Dual
A/C Thermistor
F
J 5
Junction Connector
P 3
Pressure SW
4
B
BR
W–B
3
IF1
1
IG3
EA
BR

System Outline

Current is applied at all times through the HEATER fuse to TERMINAL 5 of the HTR relay.
When the ignition SW is turned on, the current flows through the GAUGE fuse to TERMINAL 2 of the HTR relay to TERMINAL 1 to TERMINAL 6 of the blower SW.

1. Heater Blower Motor Operation

* Low speed operation
When the blower SW is moved to LO position, the current flows to TERMINAL 6 of the blower SW to TERMINAL 5 to GROUND, causing the HTR relay to turn on. This causes the current flows from the HEATER fuse to TERMINAL 5 of the HTR relay to TERMINAL 3 to the blower motor to the blower resistor to GROUND, rotating the blower motor at low speed.

* Medium speed operation (Operation at M1, M2)
When the blower SW is moved to M1 position, the current flows to TERMINAL 6 of the blower SW to TERMINAL 5 to GROUND, causing the HTR relay to turn on. This causes the current flows from the HEATER fuse to TERMINAL 5 of the HTR relay to TERMINAL 3 to the blower motor to the blower resistor to TERMINAL 2 of the blower SW to TERMINAL 5 to GROUND. At this time, the blower resistance of the blower resistor is smaller than at low speed, so the blower motor rotates at medium low speed.
When the blower SW is moved to M2 position, the current flows through the HTR relay to the blower motor to the blower resistor to TERMINAL 1 of the blower SW to TERMINAL 5 to GROUND. At this time, resistance of the blower resistor is smaller than at M1 position, so the blower motor rotates at medium high speed.

* High speed operation
When the blower SW is moved to HI position, the current flows to TERMINAL 6 of the blower SW to TERMINAL 5 to GROUND, causing the HTR relay to turn on.
This causes the current flows from the HEATER fuse to TERMINAL 5 of the HTR relay to TERMINAL 3 to the blower motor to TERMINAL 4 of the blower SW to TERMINAL 5 to GROUND, rotating the blower motor at high speed.

2. Air Conditioning Operation

When the blower SW is set on, the current flows from the HEATER fuse to the HTR relay (Point side) to the A/C fuse to the TERMINAL 8 of the A/C SW and TERMINAL 2 of the defroster mode SW. If the A/C SW or the defroster mode SW is turned on, at this time a signal is input into the engine control module. This activates the engine control module and M/G CLT relay. So that current flows from the A/C fuse to M/G CLT relay (Point side) to A/C magnetic clutch. Causing the compressor to operate.

3. DEF or FOOT & DEF Synchronized Control Function

When the blower SW is on and the heater control lever (Air vent mode control lever) turned to DEF or FOOT & DEF position, it causes A/C to run and the air inlet control SW to be at FRESH position whether A/C SW is on or not.

○ : Parts Location

Code	See Page	Code	See Page	Code	See Page
A1	34	B4	36	E5 C	36
A7	36	B5	36	J5	37
A11	36	D3	36	J7	37
B3	36	E3 A	36	P3	35

⬭ : Relay Blocks

Code	See Page	Relay Blocks (Relay Block Location)
1	23	Engine Room R/B (Engine Compartment Left)
3	28	RH R/B (Right Side of the Instrument Panel Reinforcement)

: **Junction Block and Wire Harness Connector**

Code	See Page	Junction Block and Wire Harness (Connector Location)
IC	25	Engine Room Main Wire and Instrument Panel J/B (Lower Finish Panel)
IF	25	Instrument Panel Wire and Instrument Panel J/B (Lower Finish Panel)
IG		
IL	24	
IM		
3A	29	Instrument Panel Wire and RH J/B (Right Side of the Instrument Panel Reinforcement)
3B		

: **Connector Joining Wire Harness and Wire Harness**

Code	See Page	Joining Wire Harness and Wire Harness (Connector Location)
EA1	40	Engine Wire and Engine Room Main Wire (Inside of the Engine Room R/B)
IA6	42	Engine Room Main Wire and Instrument Panel Wire (Instrument Panel Reinforcement LH)
IF1	43	Instrument Panel Wire and A/C Sub Wire (Left Upper Side of the Blower Unit)
IG3	43	Engine Wire and Instrument Panel Wire (Blower Unit RH)

: **Ground Points**

Code	See Page	Ground Points Location
EA	40	Front Right Fender
IG	42	Right Kick Panel