SLIDING ROOF

COMPONENTS
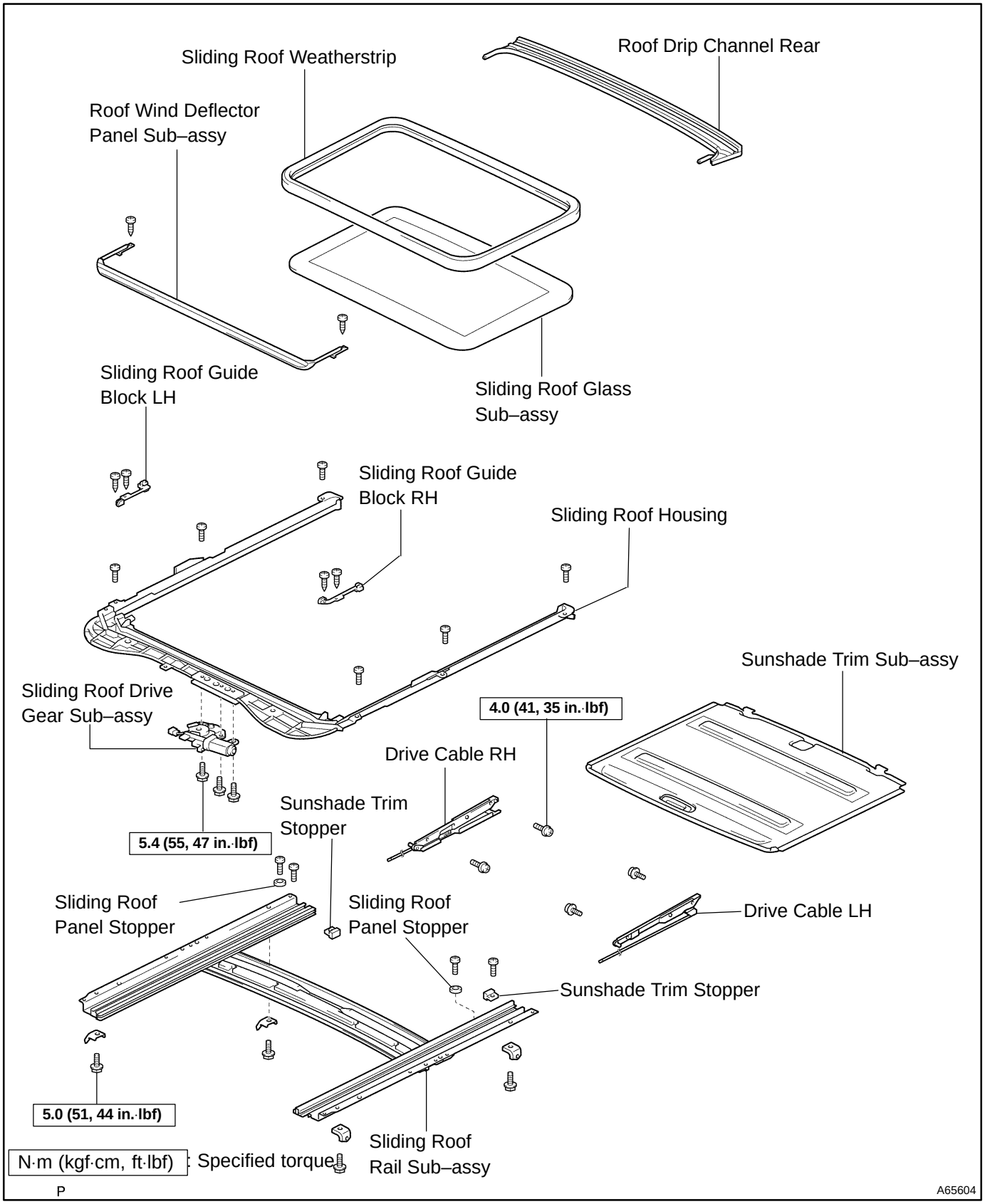
7405Y–01