SHIFT & SELECT LEVER SHAFT ASSY (C60)

4108E–01

COMPONENTS

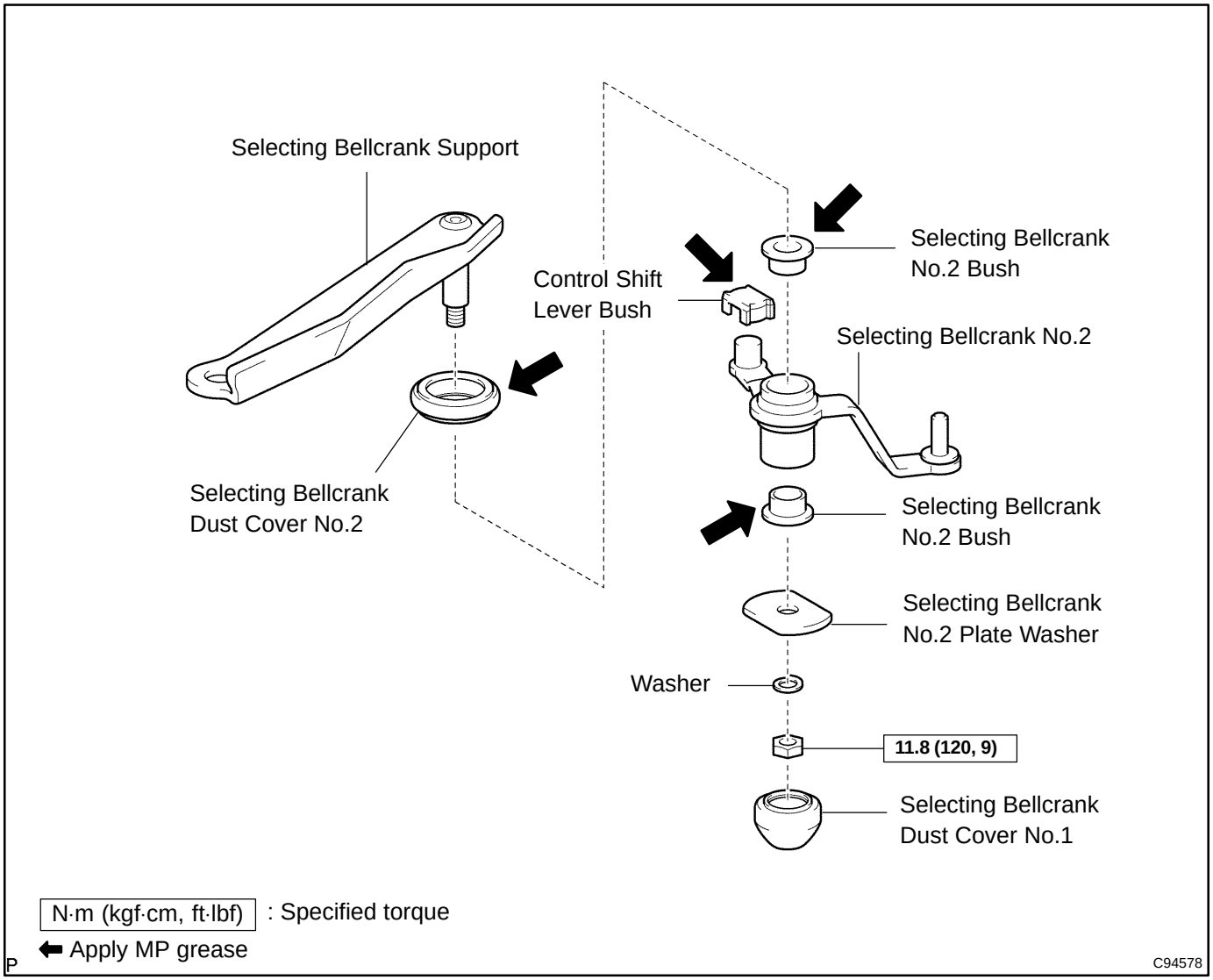

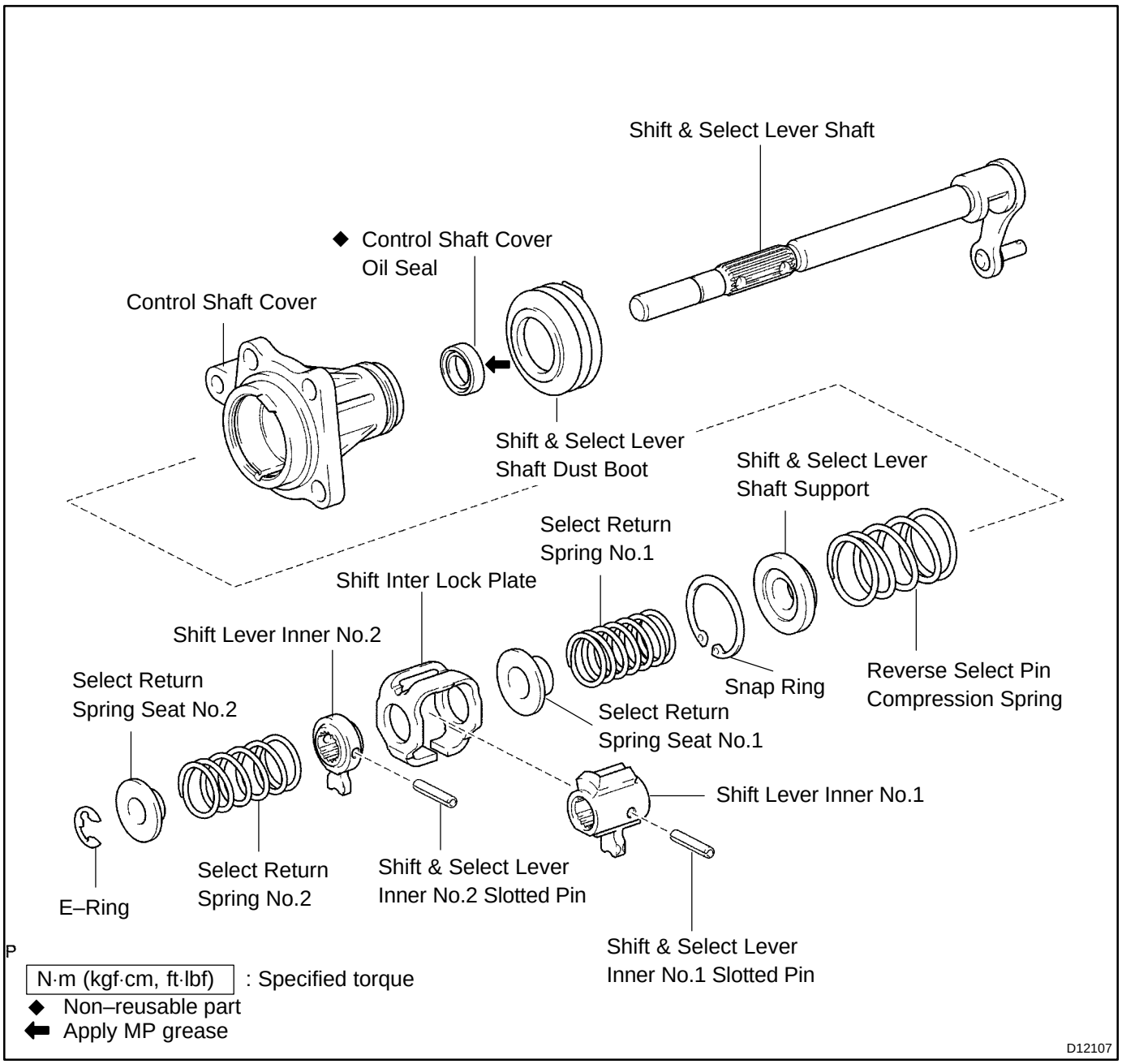
Shift & Select Lever Shaft
◆ Control Shaft Cover Oil Seal
Control Shaft Cover
Shift & Select Lever Shaft Dust Boot
Shift & Select Lever Shaft Support
Select Return Spring No.1
Shift Inter Lock Plate
Shift Lever Inner No.2
Select Return Spring Seat No.2
Snap Ring
Reverse Select Pin Compression Spring
Select Return Spring Seat No.1
Shift Lever Inner No.1
E–Ring
Select Return Spring No.2
Shift & Select Lever Inner No.2 Slotted Pin
Shift & Select Lever Inner No.1 Slotted Pin
P
N·m (kgf·cm, ft·lbf) : Specified torque
◆ Non–reusable part
Apply MP grease
D12107