TRANSFER ASSY (U341F)

COMPONENTS

3102H–01

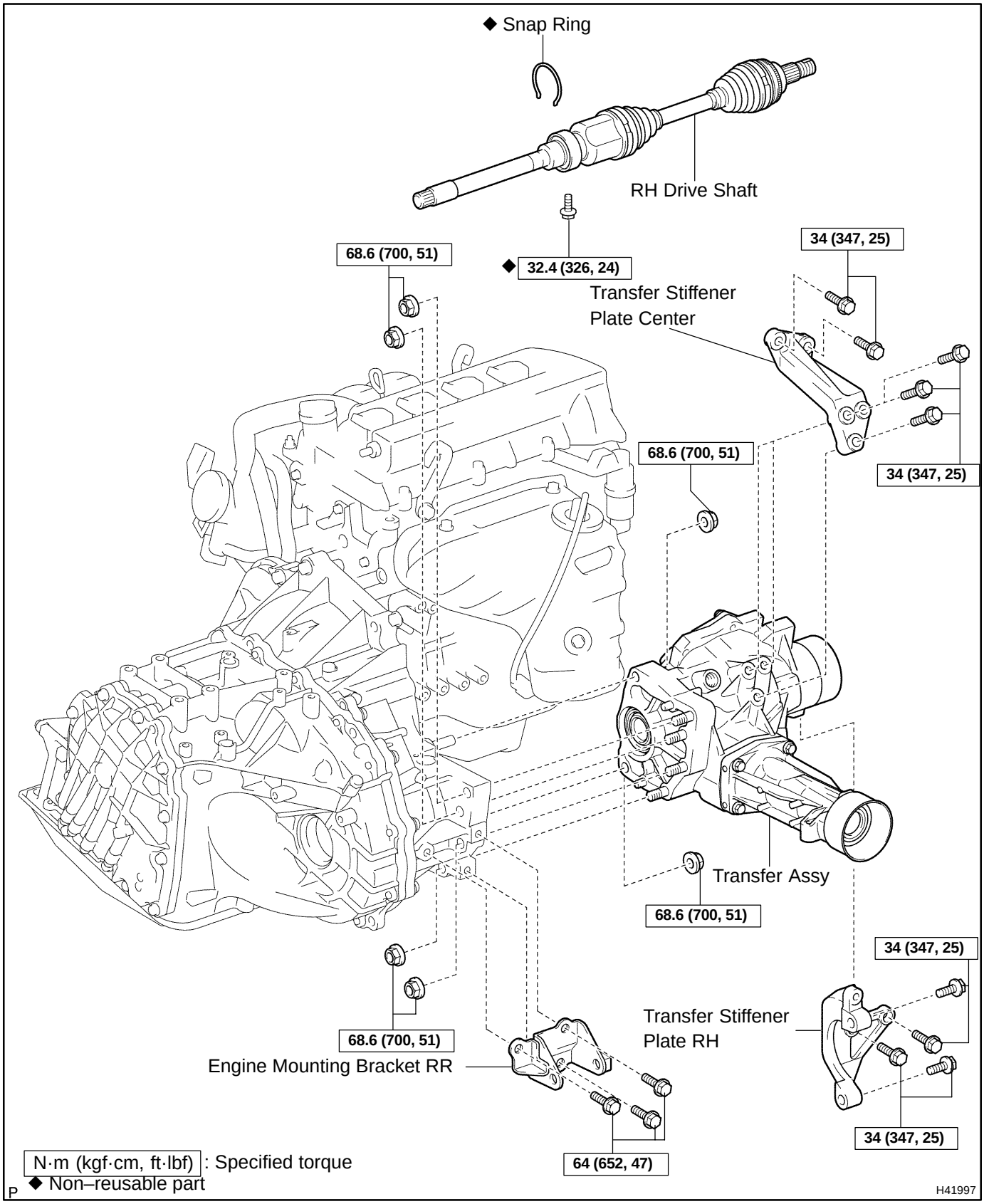

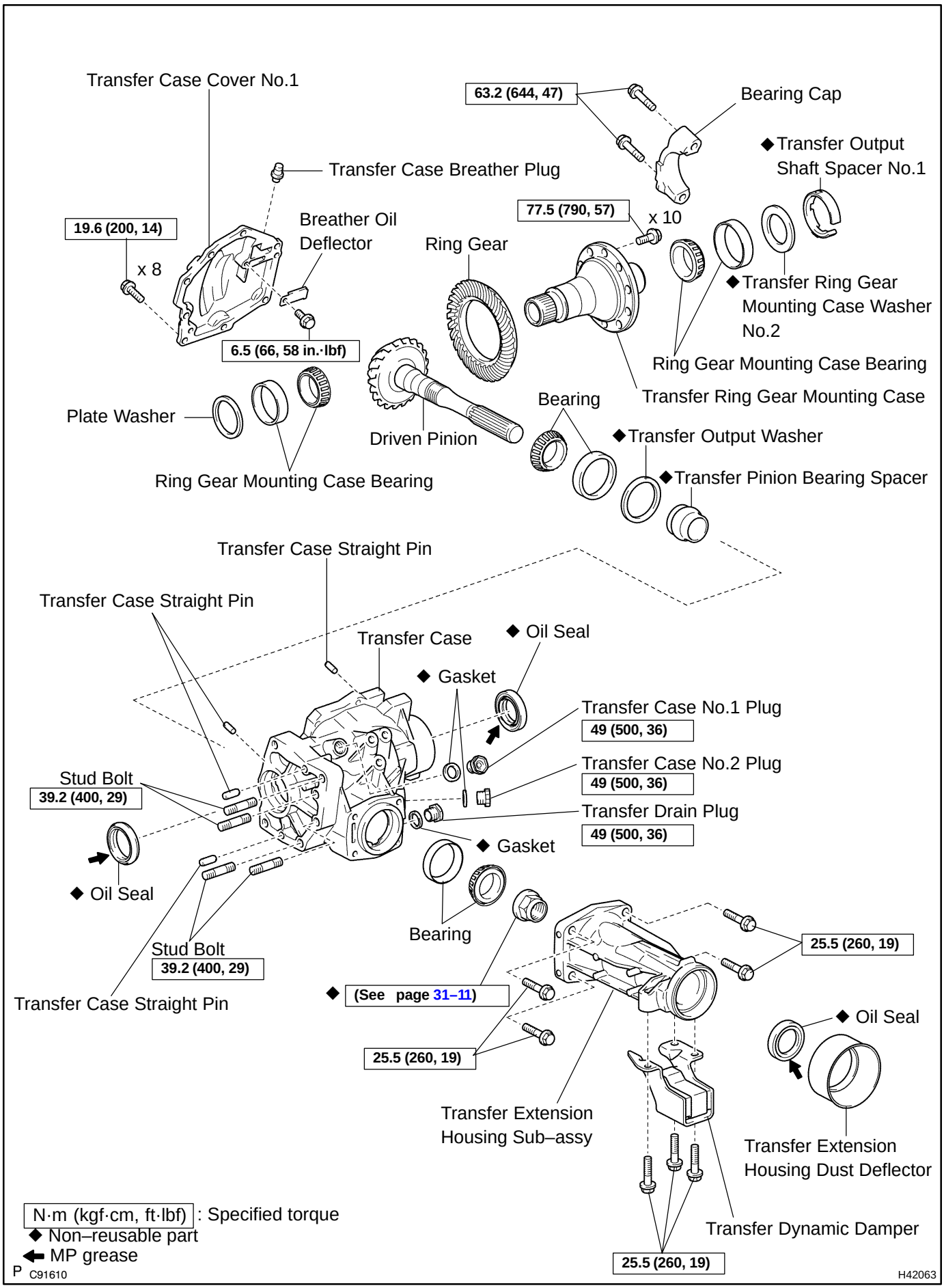
Transfer Case Cover No.1
63.2 (644, 47)
Bearing Cap
◆Transfer Output Shaft Spacer No.1
Transfer Case Breather Plug
19.6 (200, 14)
x 8
Breather Oil Deflector
77.5 (790, 57)
x 10
Ring Gear
◆Transfer Ring Gear Mounting Case Washer No.2
6.5 (66, 58 in.·lbf)
Ring Gear Mounting Case Bearing
Transfer Ring Gear Mounting Case
Plate Washer
Bearing
Driven Pinion
◆Transfer Output Washer
Ring Gear Mounting Case Bearing
◆Transfer Pinion Bearing Spacer
Transfer Case Straight Pin
Transfer Case Straight Pin
Transfer Case
◆ Oil Seal
◆ Gasket
Transfer Case No.1 Plug
49 (500, 36)
Transfer Case No.2 Plug
49 (500, 36)
Stud Bolt
39.2 (400, 29)
Transfer Drain Plug
49 (500, 36)
◆ Gasket
◆ Oil Seal
Bearing
Stud Bolt
39.2 (400, 29)
25.5 (260, 19)
Transfer Case Straight Pin
◆ (See page 31–11)
◆ Oil Seal
25.5 (260, 19)
Transfer Extension Housing Sub–assy
Transfer Extension Housing Dust Deflector
N·m (kgf·cm, ft·lbf) : Specified torque
◆ Non–reusable part
MP grease
Transfer Dynamic Damper
25.5 (260, 19)
P C91610
H42063