FRONT DRIVE SHAFT (1ZZ–FE)

300B1–01

COMPONENTS

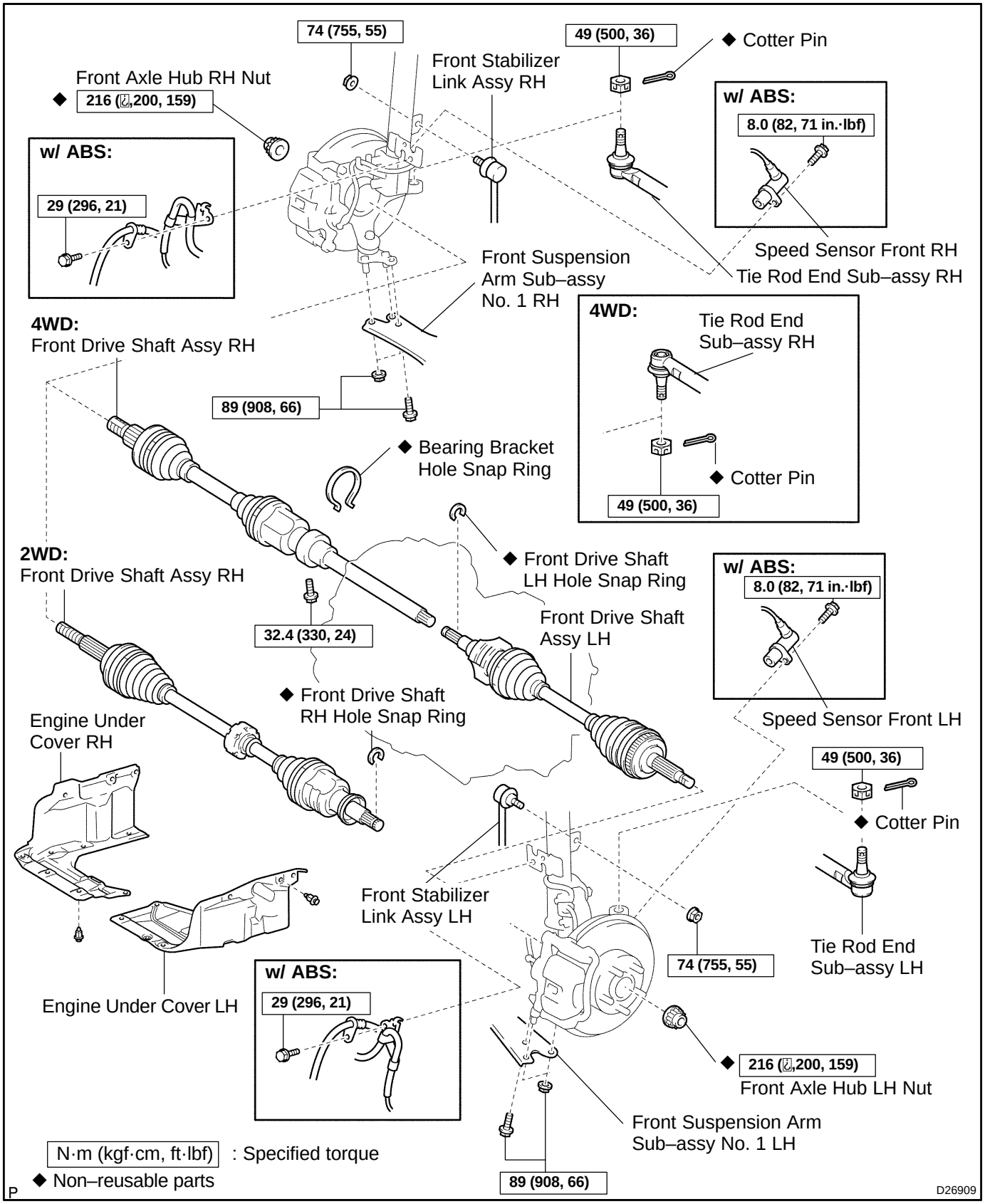

2WD:

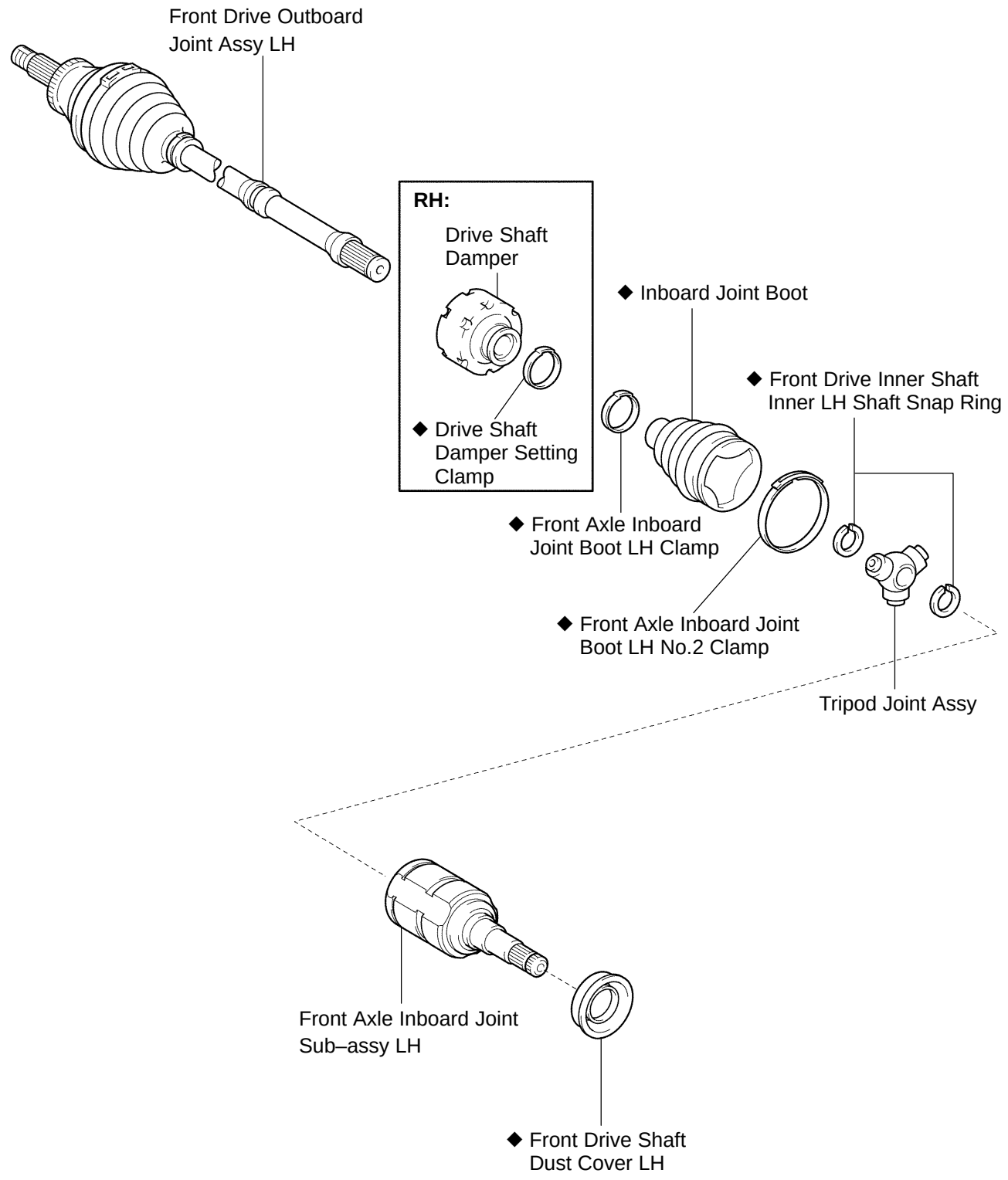

◆ Non–reusable parts

P D26924

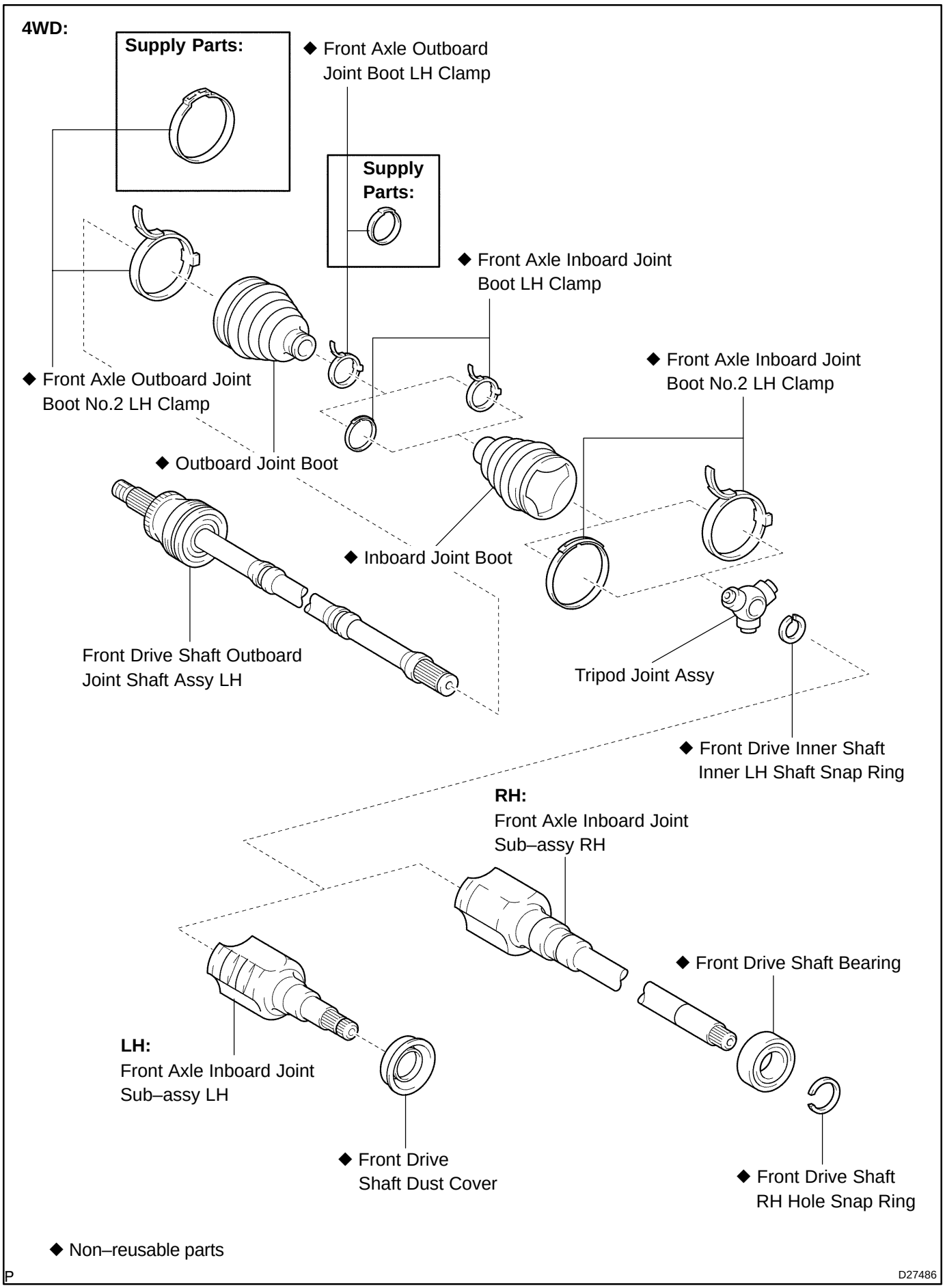
4WD:
Supply Parts:
◆ Front Axle Outboard Joint Boot LH Clamp
Supply Parts:
◆ Front Axle Inboard Joint Boot LH Clamp
◆ Front Axle Outboard Joint Boot No.2 LH Clamp
◆ Front Axle Inboard Joint Boot No.2 LH Clamp
◆ Outboard Joint Boot
◆ Inboard Joint Boot
Front Drive Shaft Outboard Joint Shaft Assy LH
Tripod Joint Assy
◆ Front Drive Inner Shaft Inner LH Shaft Snap Ring
RH:
Front Axle Inboard Joint Sub–assy RH
◆ Front Drive Shaft Bearing
LH:
Front Axle Inboard Joint Sub–assy LH
◆ Front Drive Shaft Dust Cover
◆ Front Drive Shaft RH Hole Snap Ring
◆ Non–reusable parts
P
D27486